Frequency Band (MHz)	700-750	824-960	1710-1990	2110-2170	2500-2700	3400-4000
Gain (dBi) (at antenna)	4.6	3.5	1	1	0	0
Gain (dBi) (at connector)	2.3	1.3	-2	-2	-3	-3
Total radiation efficiency (dB)	>-2	>-1	>-1.7	>-1	>-1	>-3
S11 (dB)	<-10	<-12	<-12	<-15	<-10	<-10
Polarization	Linear	Linear	Linear	Linear	Linear	Linear

RESISTOR 10K LOAD AT ANTENNA PORT

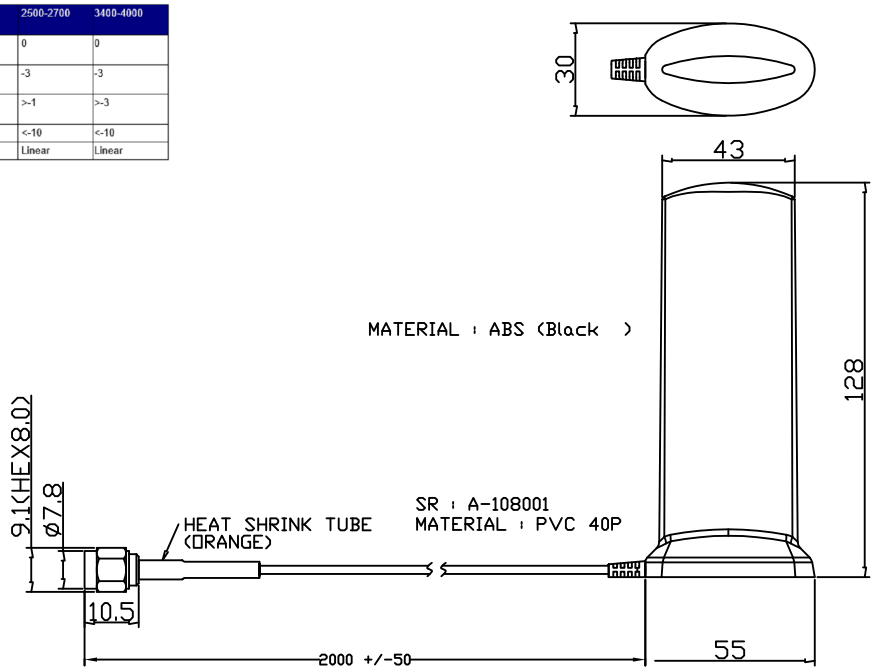

modifiche changes

data date	descrizione description	riferimento reference

DESCRIZIONE DESCRIPTION

ANT DIP MAG 4G 2000mm RG174 SMA 10KOhm

MATERIALE MATERIAL	TRATTAMENTO TREATMENT N/I	DISEGNO N. DRAWING REF.
AUTORE AUTHOR MC	SCALA SCALE no / VER REL 1.0	STATO STATUS P
REV. REV. LN	RIFERIMENTO ARTICOLO PART NUMBER 631B_200RG174_SMA	UNITA' UNITS mm
DATA DATE 160919		

TOLLERANZE GENERALI GENERAL TOLERANCES UNI ISO 2768-mK